CHECK"ur"PCB

The interactive preview for your production data

Order Number: **File Name:**

Click the buttons below to show or hide layers

Show All

Hide All

Drills

Layer 1

Layer 2

Mask 1

Mask 2

Outline

Silk 1

Silk 2

Rout

Paste 1

Paste 2

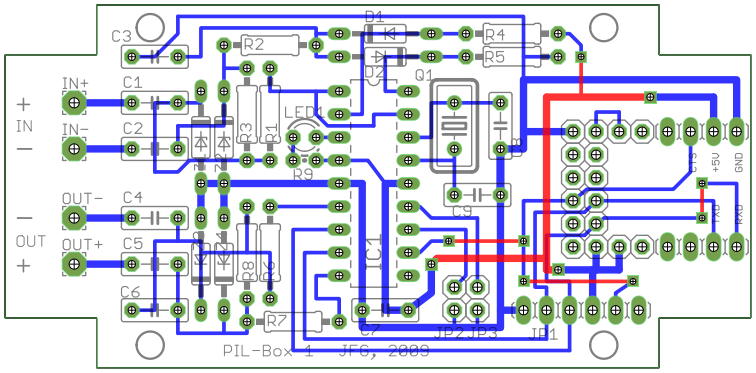

Show All

Overall view of your PCB with the production data created by us.

CHECKâ€œurâ€œPCB offers you the opportunity to view your PCB data revised by us for production in this pdf. Both the creation of the panel and the minimal adjustments required for production were carried out here.

The existing layers can be shown or hidden separately or together.

In order to be able to deliver your order on time, we will start producing your PCB shortly. Therefore, if possible, please check your production data with the help of this pdf.